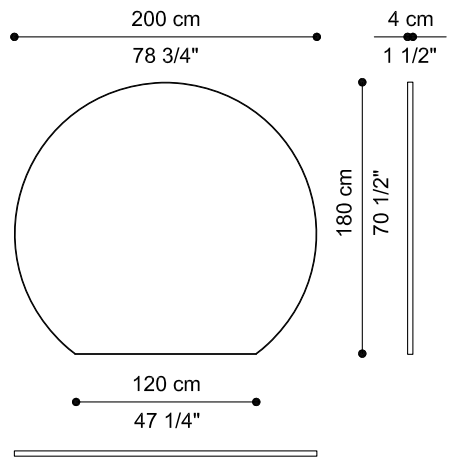
200 cm
78 3/4"
4 cm
1 1/2"
180 cm
70 1/2"
120 cm
47 1/4"