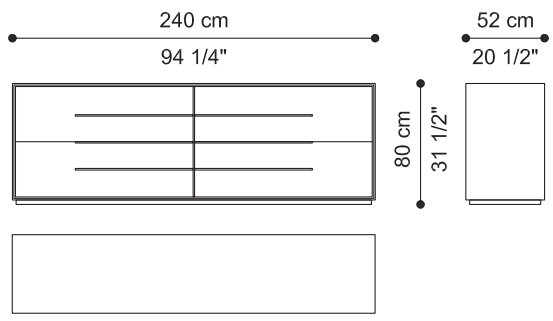
240 cm
94 1/4"
52 cm
20 1/2"
80 cm
31 1/2"