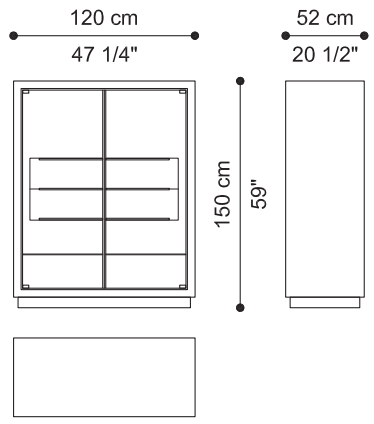
120 cm
47 1/4"
52 cm
20 1/2"
150 cm
59"