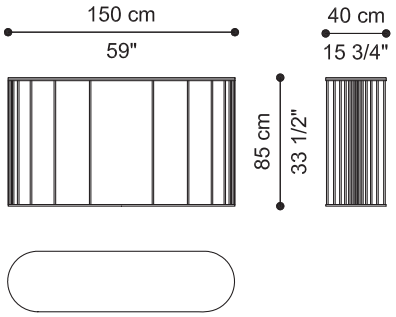
150 cm
59"
40 cm
15 3/4"
85 cm
33 1/2"