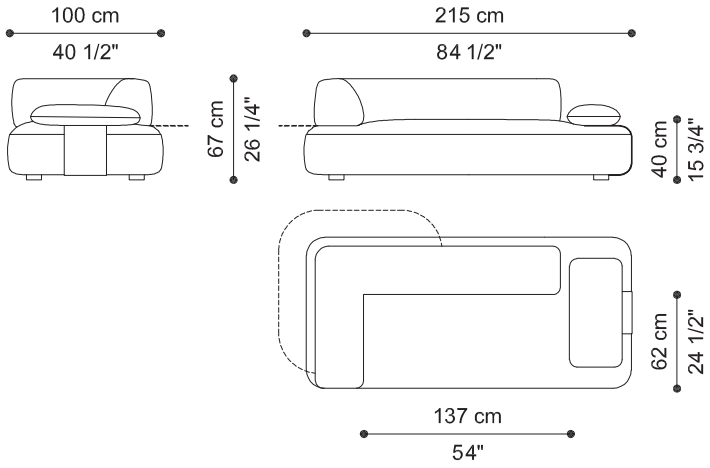
100 cm
40 1/2"
67 cm
26 1/4"
215 cm
84 1/2"
40 cm
15 3/4"
62 cm
24 1/2"
137 cm
54"